CRIZTO SINGAPORE PTE LTD
10 Tampines North Drive 4 #04-08/09/10/11
JTC Space @ Tampines North Singapore 528553
T: +65 6287 5287 | F: +65 6287 9287 | E: sales@crizto.com
W: www.crizto.com | www.facebook.com/CriztoSingapore

CRIZTO®
a beautiful bathroom speaks well of its owner, make yours speak for you.™

SANITARY WARE SPECIFICATIONS & TECHNICAL DRAWINGS

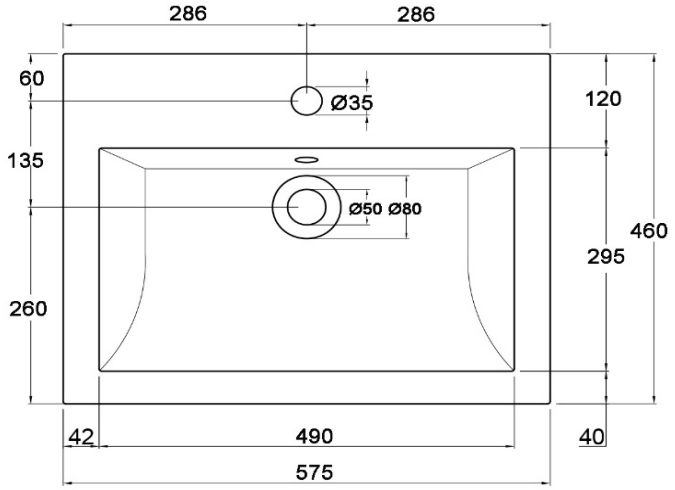

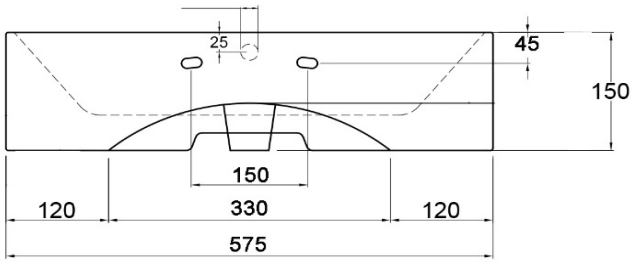

MODEL NO.	SERIES
CCB-80015-GWT	ARTISTIC BASINS

DESCRIPTION
CRIZTO RECTANGULAR ARTISTIC BASIN WITH TAP HOLE

DIMENSION
L575MM X W460MM X H150MM X D105MM

SCALE	DATE	DRAWING NO.
	01-02-2021	CCB-80015-GWT-01